Product Data Sheet

DX25125W

RK Range

Light rigid conduits RK9 range, made of PVC, classification 22211, available in the following versions: 2 m length, grey RAL 7035 colour and five diameters, from 16 to 40 mm with sleeved end; 3 m length, grey RAL 7035 colour and six diameters, from 16 to 50 mm with straight end or sleeved end; 3 m length, white RAL 9010 colour and five diameters, from 16 to 40 mm with straight end. Suitable for electrical and/or data transmission systems and to be installed in uncrowded areas. They represent the best solution for those who do not require a high impact resistance but at the same time do not want to compromise on quality. They can be integrated with spiraled sheaths and wall mounting enclosures. Completing the offer, a wide range of accessories and routing components from IP40 to IP67 protection rating. The RK9 conduits comply with Product Standard EN 61386-1 and EN 61386-21.

Colour	White RAL 9010	Material	PVC
Length (m)	3	Conduits Ø (mm)	25
Glow Wire Test	960 °C	Resistance to compression	2 (Light - 320 N)
Resistance to impact	2 (Light - 320 N)	Resistance to bending	1 (Rigid)
Electrical characteristics	2 (With electrical insulating characteristics)	Protection against ingress of solid objects without accessories	0
Protection against ingress of water objects without accessories	0	Resistance against corrosion	Not applicable to plastic conduit systems
Fire resistance	1 (Non-flame propagating)	Protection against ingress of solid objects with accessories	4/6 (It depends on the accessories used)
Protection against ingress of water with accessories	0/5/7 (It depends on the accessories used)	Standard	EN 61386-1 EN 61386-22
Family	RK9	Classification	22211

DIMENSIONAL

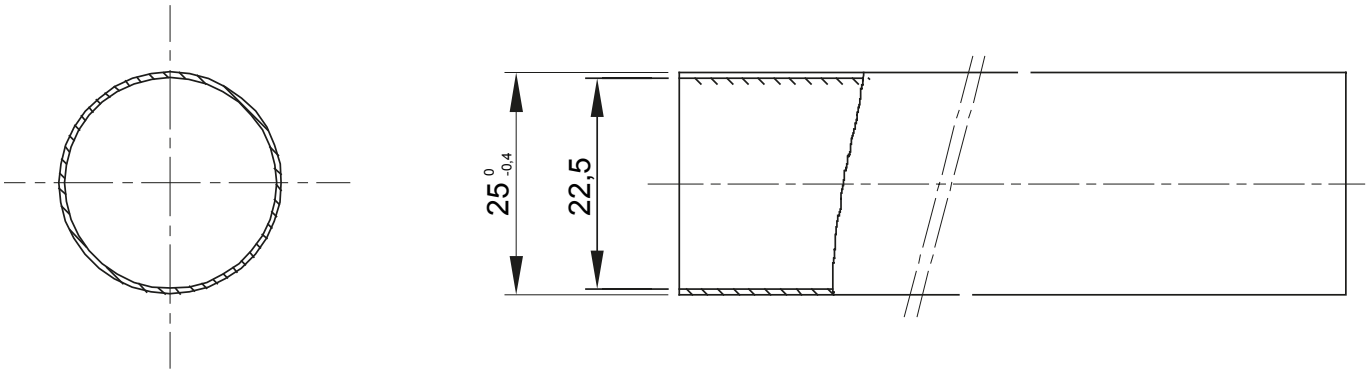

TECHNICAL SYMBOLOGY

GWT 320N

960 °C

STANDARDS/APPROVALS

GEWISS S.p.A. Via A. Volta, 1
24069 Cenate Sotto - Bergamo - Italy
tel. +39 035 94 61 11 fax +39 035 94 69 09
Company subject to the management and coordination of Polifin S.p.A.

www.gewiss.com
sat@gewiss.com
Last update 25/11/2026

Data, measures, designs and pictures are shown only as informative purposes, and could be changed without previous notice